WORKY QUAD
MINILOADERS








LOAD DIAGRAMS

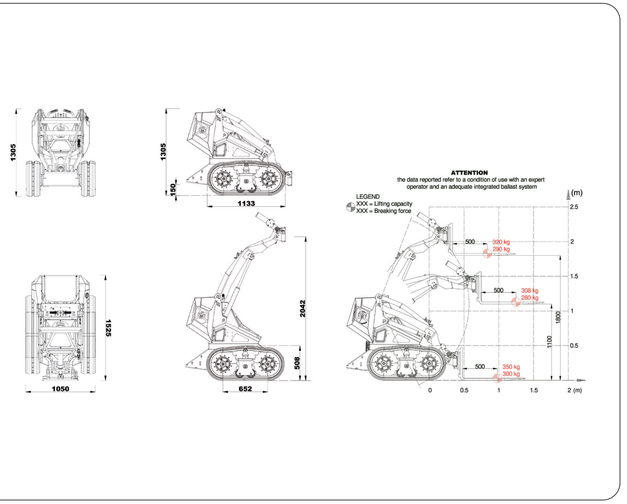

The information contained in this document is subject to change without prior notice and/or notification.
Cast Group reserves the right to modify its products without the obligation to communicate such changes.
The images contained in this document are for demonstration purposes only.

PI-WX series_ENG_10/2025 - AQ000000047

*WITH COUNTERWEIGHTS

☐ WX 15D RC	340 Kg*	14,8 HP @ 3200 rpm	25,6 L/min	2110 mm
☐ WX 21 HF	350 Kg*	20,3 HP @ 3600 rpm	40,0 L/min	2110 mm
☐ WX 22 HF	350 Kg*	22,1 HP @ 3600 rpm	40,0 L/min	2110 mm
☐ WX 1000	1350 Kg*	26 HP @ 3000 rpm	68,0 L/min	2110 mm

CASTGROUP
CAST GROUP S.r.l.
Via Ponte Grasso, 4, 30030, Salzano(VE), Italia
ph.+39 041 5701827- fax +39 041 5726786
info@cast-group.it | www.cast-group.it

ENG

WORKY QUAD
MINILOADERS



WX SERIES

- ☐ WX15 RC
- ☐ WX21 HF
- ☐ WX22 HF
- ☐ WX1000

www.cast-group.it

WX15

BOOM

High-strength steel boom, dual-cylinder lifting system.

TRACK

Rubber track with improved grip and "all trac" tread pattern.

FUEL TANK

Integrated tank within the body. Capacity of 25 liters.





REMOTE TRANSMITTER

Engine: KUBOTA Z602 - E4B
Power: 10.9 kW / 14.8HP
Fuel: Diesel
Drive system: radio-controlled
Speed: 0-4km/h (proportional)
Hydraulic system: 25.6L/min - 190bar
Lifting capacity: 340Kg
Traction capacity: 500Kg
Pulling force: 300Kg
Dimensions: 1525x1050x1305mm
Empty weight: 884Kg

HF MODELS

WX21 HF

Engine: KUBOTA D722-E4B
Power: 14.9kW - 20.3HP
Fuel: Diesel
Speed: 0-5km/h (proportional)
Hydraulic system: 40L/min - 190bar
Lifting capacity: 340Kg
Traction capacity: 700Kg
Pulling force: 320Kg
Dimensions: 1525x1050x1305mm
Empty weight: 890Kg



40 L/MIN HYDRAULIC FLOW



WX22 HF

Engine: HONDA GX690
Power: 16.5kW - 22.1HP
Fuel: gasoline(Euro95)
Speed (km/h): 0-6(proportional)
Hydraulic system: 40L/min - 190bar
Lifting capacity: 350Kg
Traction capacity: 685Kg
Pulling force: 320Kg
Dimensions: 1525x1050x1305mm
Empty weight: 830Kg

Practicality, robustness, and reliability make the WX an exceptional and versatile machine, capable of handling all types of terrain and conditions.
The WX version was developed for the demanding professional who needs to work in tight spaces while having a reliable machine that is compact yet delivers high performance.
The hydraulic flow these machines can provide makes them effective and efficient even with the most complex attachments, reaching a maximum of 68L/minon our flagship model, the WX1000.

WX1000

THE NEW 25HP MINI SKID-STEER









VPT SYSTEM

Thanks to the VPT System, the power is always where you need it: you can precisely shift it between traction and hydraulic outlets to achieve maximum performance in any situation.

TOUCH DISPLAY

DOUBLE AUX-LINES INDEPENDENT

SHOCK-ABSORBING PLATFORM

"TORO" PLATE



Engine: KUBOTA D1105
Power: 18.6kW/25HP
Starting: electric
Displacement/n. of cylinders: 1123cm3/3
Cooling system: liquid
Fuel: diesel
Drive system: hydrostatic
Speed: 0–6km/h (proportional)
Hydraulic system: 1x68L/min, 1x35L/min

Standard wheels: 200/230mm tracks

Nominal lifting capacity: 455Kg
Tilting lifting capacity: 1350Kg
Towing capacity: 1200Kg
Breakout force: 800Kg
Dimensions: 2160x860x1420mm
Empty weight: 1375Kg